SONY

3-859-537-**12**(1)

Compact Hi-Fi Stereo System

Operating Instructions

COMPACT disc DIGITAL AUDIO

LBT-XB3
LBT-XB5
LBT-XB6

©1997 by Sony Corporation

WARNING

To prevent fire or shock hazard, do not expose the unit to rain or moisture.

To avoid electrical shock, do not open the cabinet. Refer servicing to qualified personnel only.

Do not install the appliance in a confined space, such as a bookcase or built-in cabinet.

Laser component in this product is capable of emitting radiation exceeding the limit for Class 1.

This appliance is classified as a CLASS 1 LASER product. The CLASS 1 LASER PRODUCT MARKING is located on the rear exterior.

This caution label is located inside the unit.

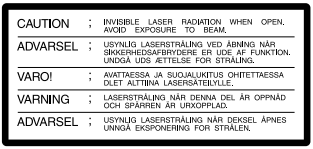

For customers in the United Kingdom

A moulded plug complying with BS 1363 is fitted to this equipment for your safety and convenience.

Should the fuse in the plug supplied need to be replaced, a 5 AMP fuse approved by ASTA or BSI to BS 1362, (i.e. marked with ⓐ or ♡ mark) must be used.

If the plug supplied with this equipment has a detachable fuse cover, be sure to attach the fuse cover after you change the fuse. Never use the plug without the fuse cover. If you should lose the fuse cover, please contact your nearest Sony service station.

IMPORTANT

If the plug supplied is not suitable for the socket outlets in your home, it should be cut off and an appropriate plug fitted in accordance with the following instructions.

The wires in this mains lead are coloured in accordance with the following code:

Blue: Neutral

Brown: Live

As the colours of the wires in the mains lead of this apparatus may not correspond with the coloured markings identifying the terminals in your plug, proceed as follows:

The wire which is coloured blue must be connected to the terminal which is marked with letter N or coloured black. The wire which is coloured brown must be connected to the terminal which is marked with the letter L or coloured red.

Do not connect either wire to the earth terminal in the plug which is marked by the letter E or by the safety earth symbol Y or coloured green or green-and-yellow.

WARNING

To prevent shock hazard, do not insert the plug cut off from the mains lead into a socket outlet. This plug cannot be used and should be destroyed.

Note

The AC power cord has been fixed on the rear panel with the plug band temporarily for shipment. Unlock the plug band to remove the plug.

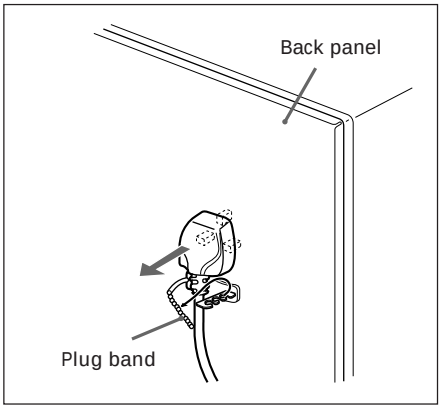

This stereo system is equipped with the Dolby* B-type noise reduction system.

* Dolby noise reduction manufactured under license from Dolby Laboratories Licensing Corporation.

"DOLBY" and the double-D symbol ⧈ are trademarks of the Dolby Laboratories Licensing Corporation.

Table of Contents

Getting Started

Step 1: Hooking up the system 4
Step 2: Setting the time 6
Step 3: Presetting radio stations 7
Connecting optional AV components 8

Basic Operations

Playing a CD 10
Recording a CD 12
Listening to the radio 13
Recording from the radio 14
Playing a tape 15
Recording from a tape 17

The CD Player

Using the CD display 18
Playing CD tracks repeatedly 18
Playing CD tracks in random order 19
Programming CD tracks 20
Playing CDs without interruption 21

The Tape Deck

Recording on a tape manually 22
Recording CDs by specifying the track order 23

DJ Mix

Looping part of a CD 25
Flashing part of a CD 25
Waving the equalizer 26

Sound Adjustment

Adjusting the sound 27
Selecting the audio emphasis 28
Adjusting the audio emphasis 29
Making a personal audio emphasis file 30

Other Features

Singing along: Karaoke 31
Falling asleep to music 33
Waking up to music 33
Timer-recording radio programmes .. 35

Additional Information

Precautions 37
Troubleshooting 38
Specifications 40
Index 42

Step 1: Hooking up the system

Follow steps 1 through 4 to hook up your system using the supplied cords and accessories.

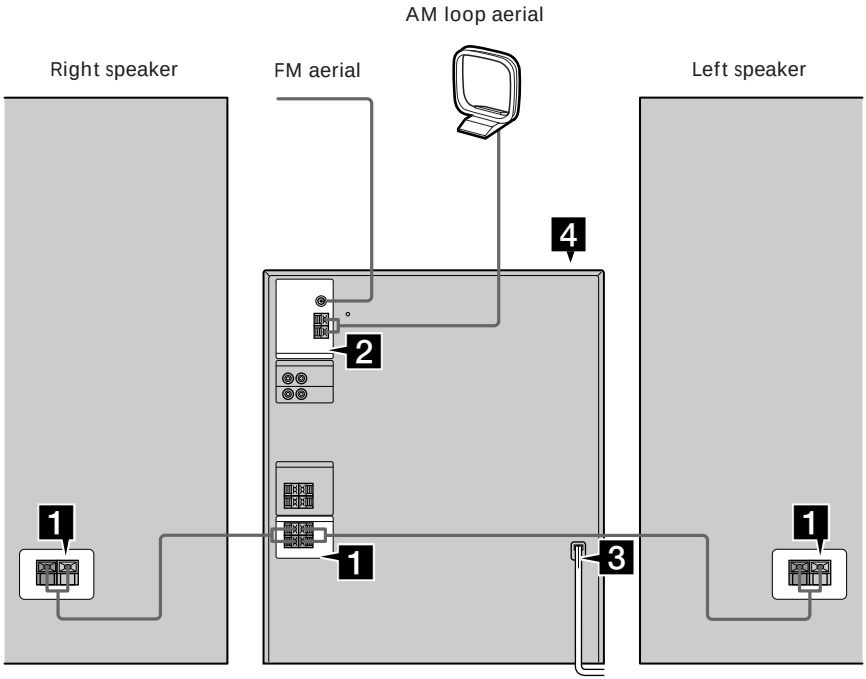

The above illustration is of the LBT-XB6.

1 Connect the speakers.

1 Connect the speaker cords to SPEAKER jacks of the same colour.

Keep the speaker cords away from the aerials to prevent noise.

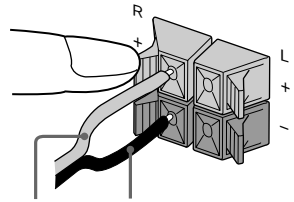

* The colour of your speaker cords might be different. See the speakers' manual for details.

2 Insert only the stripped portion of the cord. Inserting the vinyl portion will interfere with the speaker connection and no sound will come from the speaker.

Note

The speakers for LBT-XB3/XB5 do not have the speaker jacks.

Connect the speaker cords to the speaker jacks on the unit.

2 Connect the FM / AM aerials.

Set up the AM loop aerial, then connect it.

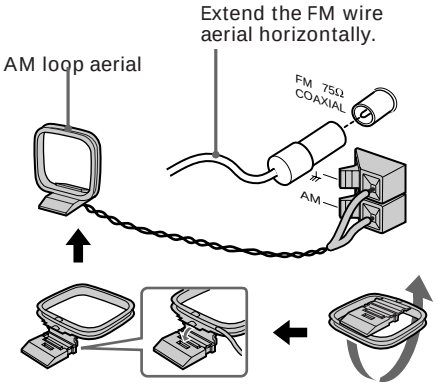

3 Connect the mains lead to mains.

The demonstration appears in the display.

4 Deactivate the demonstration mode by pressing DISPLAY / DEMO while the system power is off.

Inserting two size AA (R6) batteries into the remote

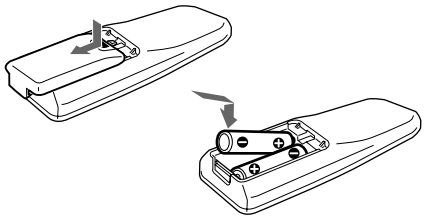

Tips

- With normal use, the batteries should last for about six months. When the remote no longer operates the system, replace both batteries with new ones.
- When you set the time, the demonstration is deactivated.

  To activate the demonstration again, press DISPLAY / DEMO while the system power is off.

Note

If you do not use the remote for a long period of time, remove the batteries to avoid possible damage from battery leakage.

When carrying this system

Do the following to protect the CD mechanism.

1. Press FUNCTION repeatedly until “CD” appears in the display.
2. Hold down PLAY MODE and press POWER to turn off the power.

Step 2: Setting the time

You must set the time before using the timer functions.

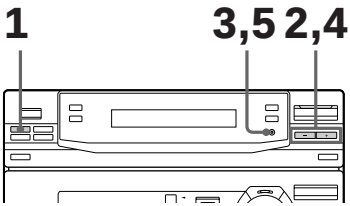

LBT-XB3 only

1 Press ⏲ / CLOCK SET.
The hour indication flashes.

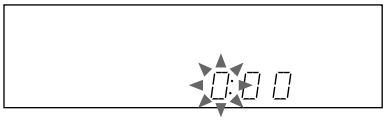

2 Press TUNING + / – to set the hour.
The clock uses the 24-hour system.

3 Press ENTER / NEXT.
The minutes indication flashes.

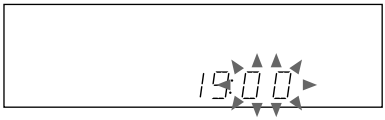

4 Press TUNING + / – to set the minutes.

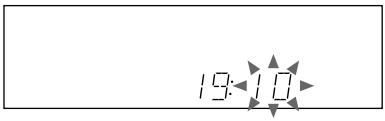

5 Press ENTER / NEXT.
The clock starts.

LBT-XB5/XB6 only

1 Press ⏲ / CLOCK SET.
The hour indication flashes.

2 Press TUNING + / – to set the hour.
The clock uses the 24-hour system.

3 Press ENTER / NEXT.
The minutes indication flashes.

4 Press TUNING + / – to set the minutes.

5 Press ENTER / NEXT.
The clock starts.

Tip

If you make a mistake, start over from step 1.

Step 3: Presetting radio stations

You can preset the following number of stations:

– 3 band model: 20 for FM, 10 for MW, and 10 for LW
– 4 band model: 20 for FM, 10 for MW, 10 for LW, and 5 for UKV

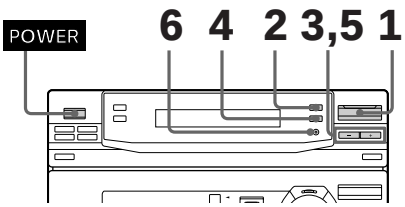

1 Press TUNER/BAND repeatedly until the band you want appears in the display.

Each time you press this button, the band changes as follows:

The bands you can select depend on the kind of tuner built into your system. Confirm the bands by pressing TUNER/BAND repeatedly.

3 band model:

FM → MW → LW

4 band model:

FM → MW → LW → UKV*

* When you select this band, "STEREO PLUS" appears in the display.

2 Press TUNING MODE repeatedly until "AUTO" appears in the display.

3 Press TUNING +/–.

The frequency indication changes and scanning stops when the system tunes in a station. "TUNED" and "STEREO" (for a stereo programme) appear.

LBT-XB3

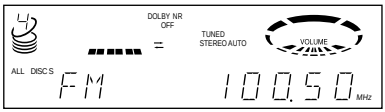

LBT-XB5/XB6

4 Press TUNER MEMORY.

A preset number flashes in the display.

LBT-XB3

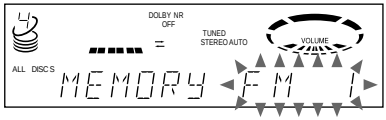

LBT-XB5/XB6

5 Press TUNING +/– to select the preset number you want.

LBT-XB3

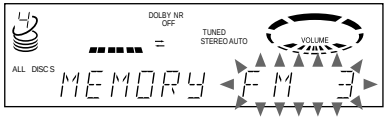

LBT-XB5/XB6

6 Press ENTER/NEXT.

The station is stored.

7 Repeat steps 1 through 6 to store other stations.

To tune in a station with a weak signal

Press TUNING MODE repeatedly until "MANUAL" appears in step 2, then press TUNING +/– to tune in the station.

Note

The preset stations are cancelled when you disconnect the mains lead or a power failure occurs for half a day.

Connecting optional AV components

To enhance your system, you can connect optional components. Refer to the instructions included with each component for details.

Connecting audio components

Connecting a turntable

Be sure to match the colour of the plugs and the connectors. To listen to the sound from the connected turntable, press FUNCTION repeatedly until “PHONO” appears.

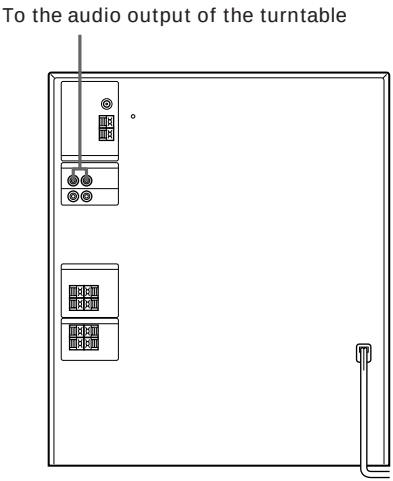

Note

Using the turntable at high volume may cause distortion or howling. This is often caused by the bass sound from the speakers. The bass sound may be picked up by the needle of the turntable, and produce the distortion or howling. To avoid this, do the following:

1. Keep some distance between the speakers and the turntable.
2. Stop using the surround effect.
3. Install the speakers or the turntable on a firm and stable surface.
4. Press DBFB repeatedly until “DBFB ▙\\\\\\ ” disappears from the display (LBT-XB3 / XB5 only).
   Press SUPER WOOFER repeatedly until the indicator on this button goes off (LBT-XB6 only).

Connecting surround speakers (LBT-XB5/XB6 only)

You can connect optional surround speakers.

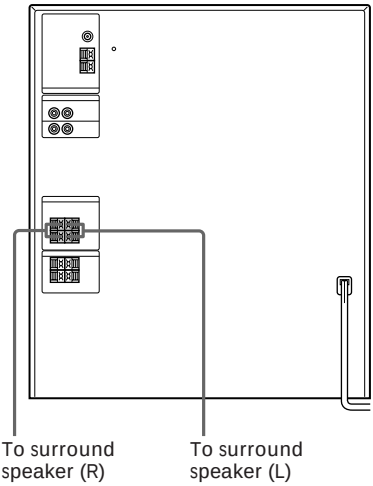

Note

You need to connect both left and right surround speakers. Otherwise, the sound will not be heard.

Connecting a VCR

Be sure to match the colour of the plugs and the connectors. To listen to the sound from the connected VCR, press FUNCTION repeatedly until “VIDEO” appears.

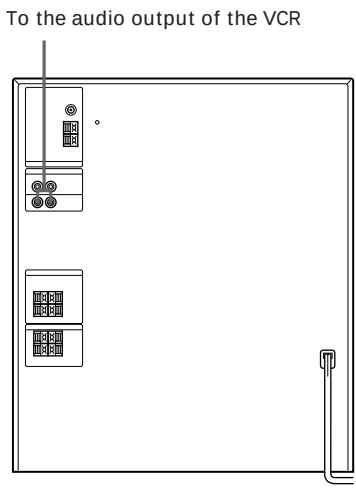

Connecting outdoor aerials

Connect an outdoor aerial to improve the reception.

FM aerial

Connect an optional FM outdoor aerial using a 75-ohm coaxial cable and IEC standard socket connector. You can also use the TV aerial instead.

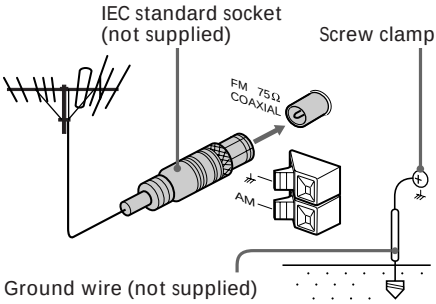

AM aerial

Connect a 6 to 15 meter (20 to 50 feet) insulated wire to the AM aerial terminal. Leave the supplied AM loop aerial connected.

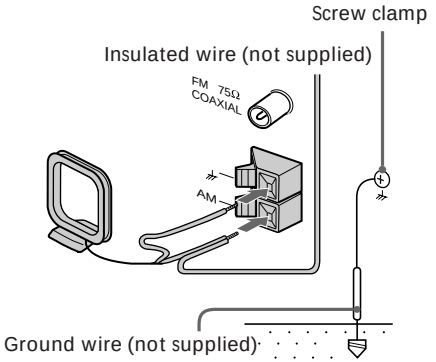

Important

If you connect an outdoor aerial, connect a ground wire to the ⏚ terminal with the screw clamp. To prevent a gas explosion, do not connect the ground wire to a gas pipe.

Playing a CD

— Normal Play

You can play up to five CDs in a row.

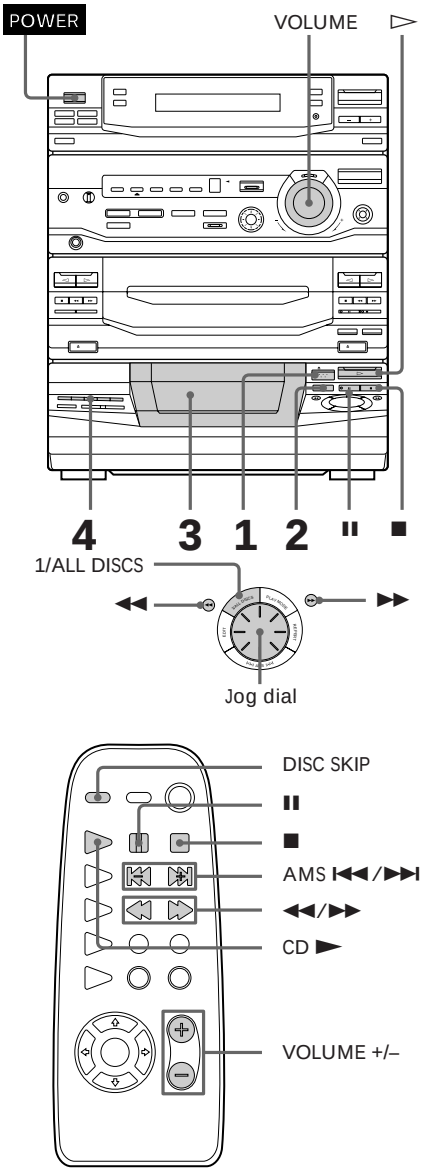

1 Press ⏏ OPEN and place a CD on the disc tray.

If the disc is not placed properly it will not be recognised.

With the label side up. When you play a CD single, place it on the inner circle of the tray.

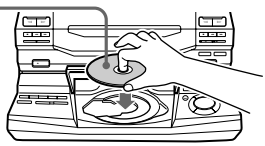

2 Press DISC SKIP to place up to four more CDs on the tray.

The disc tray rotates so you can insert other CDs.

3 Close the front cover.

4 Press one of the DIRECT PLAY buttons.

Playback starts.

If you press ▷ (or CD ► on the remote), playback starts from the CD in the playing position.

LBT-XB3

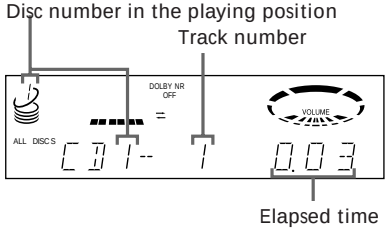

LBT-XB5/XB6

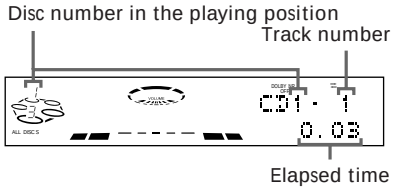

To	Do this
Stop playback	Press ■.
Pause	Press ❚❚. Press again to resume playback.
Select a track	During playback or pause, turn the jog dial clockwise (to go forward) or anticlockwise (to go backward) and release it when you reach the desired track. Or press AMS* ▶▶I (to go forward) or AMS* I◀◀ (to go backward) on the remote.
Find a point in a track	Press and hold ▶▶ or ◀◀ during playback, and release at the desired point.
Select a CD	Press one of the DIRECT PLAY buttons (or DISC SKIP).
Play only the CD you have selected	Press 1/ALL DISCS repeatedly until "1 DISC" appears.
Play all CDs	Press 1/ALL DISCS repeatedly until "ALL DISCS" appears.
Remove or change the CDs	Press ⏏ OPEN.
Adjust the volume	Turn VOLUME (or press VOLUME +/– on the remote).

* AMS: Automatic Music Sensor.

Tips

- Pressing ▷ while the power is off automatically turns the power on and starts CD playback if there is a CD on the tray (One Touch Play).
- You can switch from another source to the CD player and start playing a CD just by pressing ▷ or one of the DIRECT PLAY buttons (Automatic Source Selection).
- If there is no CD in the player, "NO DISC" appears in the display.
- You can change the CD in the loading position during playback.

Recording a CD

— CD Synchro Recording

This function lets you record from a CD to a tape easily. You can use TYPE I (normal) or TYPE II (CrO_2) tapes. The recording level is adjusted automatically.

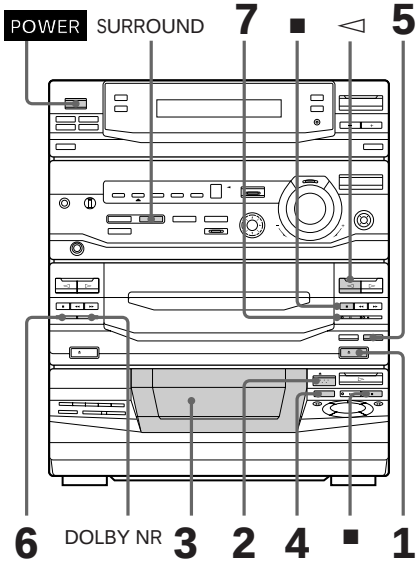

1 Press ⏏ EJECT and insert a blank tape into deck B.

With the side you want to record on facing forward

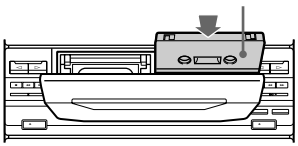

2 Press ⏏ OPEN and place a CD.

With the label side up. When you play a CD single, place it on the inner circle of the tray.

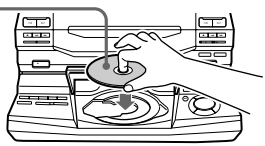

3 Close the front cover.

4 Press DISC SKIP repeatedly until the disc number you want to record appears in the playing position indicator.

5 Press CD SYNC.

Deck B stands by for recording and the CD player stands by for playback, and the indicator on the ▷ button (for the front side) lights up green.

6 Press DIRECTION repeatedly to select ⇄ to record on one side or ↻ (or RELAY) to record on both sides.

7 Press ❚❚ on deck B.

Recording starts.

To stop recording

Press ■ on deck B or on the CD player.

Tips

- If you want to record on the reverse side, press ◁ so the indicator on the ◁ button (for the reverse side) lights up green.
- When you record on both sides, be sure to start from the front side. If you start from the reverse side, recording stops at the end of the reverse side.
- When you want to reduce the hiss noise in low-level high-frequency signals, press DOLBY NR before step 7 so "DOLBY NR B" appears in the display.
- To record with the surround effect, press SURROUND so "SUR ((■)) " appears in the display.

  The equalizer settings will not be recorded.

Note

You cannot listen to other sources while recording.

Listening to the radio

— Preset Tuning

Before using this function, preset radio stations in the tuner's memory (see "Step 3: Presetting radio stations").

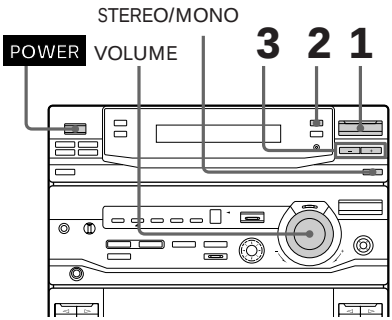

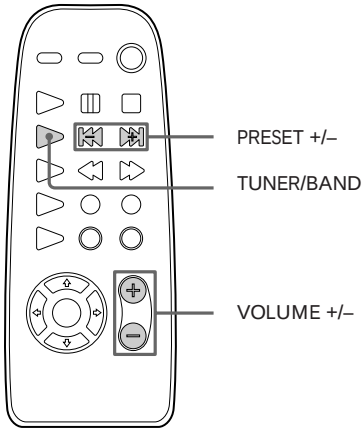

1 Press TUNER/BAND repeatedly until the band you want appears in the display.

Each time you press this button, the band changes as follows:

3 band models:

FM → MW → LW

4 band model:

FM → MW → LW → UKV

2 Press TUNING MODE repeatedly until "PRESET" appears in the display.

MANUAL → AUTO → PRESET

3 Press TUNING +/– (or PRESET +/– on the remote) to tune in the desired preset station.

LBT-XB3

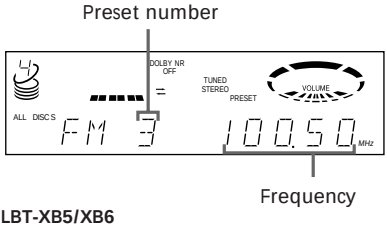

LBT-XB5/XB6

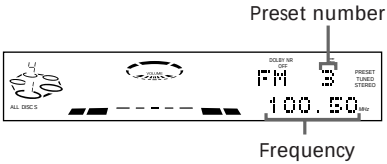

To	Do this
Turn off the radio	Press POWER.
Adjust the volume	Turn VOLUME (or press VOLUME +/– on the remote).

To listen to non-preset radio stations

Press TUNING MODE repeatedly in step 2 until "MANUAL" appears, then press TUNING +/– to tune in the desired station.

Tips

- Pressing TUNER/BAND while the power is off automatically turns on the power and tunes to the last received station (One Touch Play).
- You can switch from another source to the radio just by pressing TUNER/BAND (Automatic Source Selection).
- If an FM programme is noisy, press STEREO/MONO so "MONO" appears in the display. There will be no stereo effect, but the reception will improve. Press this button again to restore the stereo effect.
- To improve broadcast reception, move the supplied aerials.

Recording from the radio

You can record a radio programme on a tape by tuning in a preset station. You can use TYPE I (normal) or TYPE II (CrO_2) tapes. The recording level is automatically adjusted.

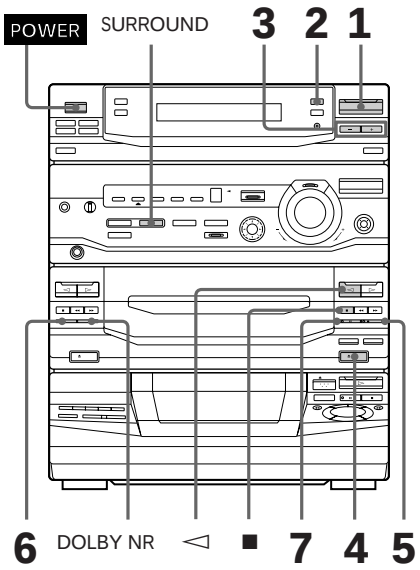

1 Press TUNER/BAND repeatedly until the band you want appears in the display.

2 Press TUNING MODE repeatedly until "PRESET" appears in the display.

3 Press TUNING + / – to tune in a preset station.

LBT-XB3

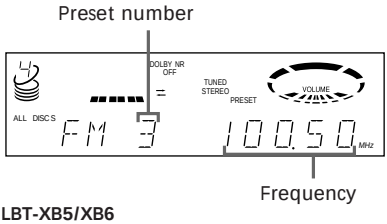

LBT-XB5/XB6

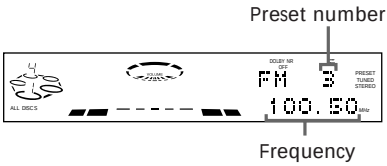

4 Press ⏏ EJECT and insert a blank tape into deck B.

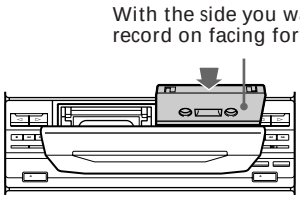

5 Press ● REC.

Deck B stands by for recording, and the indicator on the ▷ button (for the front side) lights up green.

6 Press DIRECTION repeatedly to select ⇄ to record on one side or ⇆ (or RELAY) to record on both sides.

7 Press ❚❚ on deck B.

Recording starts.

To stop recording

Press ■ on deck B.

Tips

- If you want to record on the reverse side, press ◅ so the indicator on the ◅ button (for the reverse side) lights up green.
- When you record on both sides, be sure to start from the front side. If you start from the reverse side, recording stops at the end of the reverse side.
- To record non-preset stations, select "MANUAL" in step 2, then press TUNING + / – to tune in the desired station.
- When you want to reduce the hiss noise in low-level high-frequency signals, press DOLBY NR before step 7 so "DOLBY NR B" appears in the display.
- To record with surround effect, press SURROUND so "SUR (((■))) " appears in the display.
  The equalizer settings will not be recorded.
- If noise is heard while recording from the radio, move the appropriate aerial to reduce the noise.

Playing a tape

You can play any type of tape, TYPE I (normal), TYPE II (CrO_2) or TYPE IV (metal). The deck automatically detects the tape type. To select either deck A or B, press DECK A ► or DECK B ► on the remote.

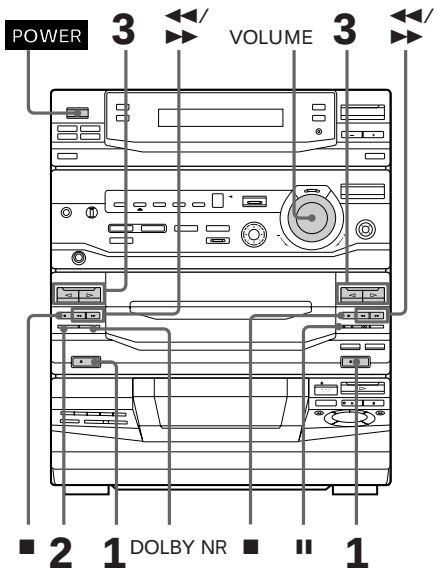

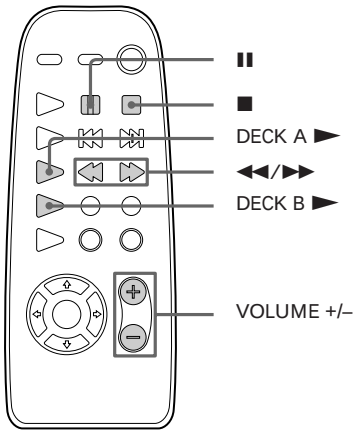

continued

1 Press ⏏ EJECT and insert a recorded tape in deck A or B.

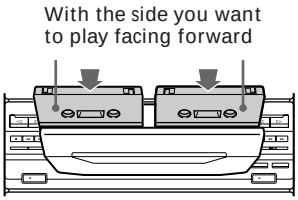

2 Press DIRECTION repeatedly to select ⇄ to play one side, ⇆* to play both sides, or RELAY (Relay Play)** to play both decks in succession.

3 Press ▷.

Press ◁ to play the reverse side. The tape starts playing.

* The deck stops automatically after playing both sides five times.

** Relay Play always plays according to the following sequence:

Deck A (front side), Deck A (reverse side), Deck B (front side), Deck B (reverse side).

To	Do this
Stop play	Press ■.
Pause (Deck B only)	Press ❚❚. Press again to resume play.
Fast-forward	Press ▶▶ while playing the front side or ◀◀ while playing the reverse side.
Rewind	Press ◀◀ while playing the front side or ▶▶ while playing the reverse side.
Remove the cassette	Press ⏏ EJECT.
Adjust the volume	Turn VOLUME (or press VOLUME + / – on the remote).

Tips

- Pressing ▷ or ◁ while the power is off automatically turns on the power and starts tape playback if there is a tape in the deck (One Touch Play).
- You can switch from another source to the tape deck just by pressing ▷ or ◁ (Automatic Source Selection).
- When you want to reduce the hiss noise in low-level high-frequency signals, press DOLBY NR so “DOLBY NR B” appears in the display.

Recording from a tape

— High-speed Dubbing

You can use TYPE I (normal) or TYPE II (CrO_2) tapes. The recording level is automatically adjusted.

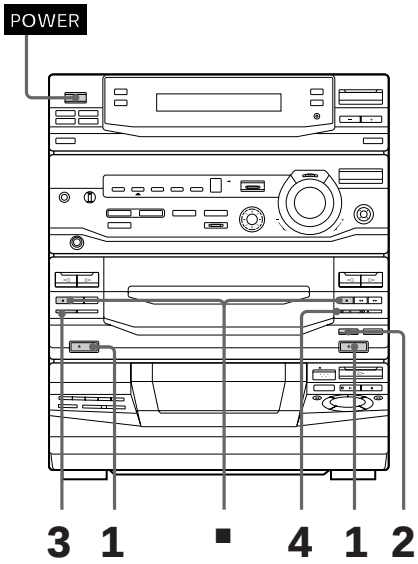

1 Press ⏏ EJECT and insert a recorded tape in deck A and a blank tape in deck B.

With the side you want to play/record on facing forward

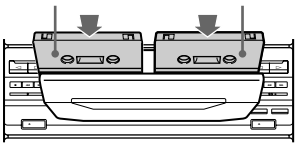

2 Press H SPEED DUB.
Deck B stands by for recording.

3 Press DIRECTION repeatedly to select ⇄ to record on one side or ⇆ (or RELAY) to record on both sides.

4 Press ❚❚.
Dubbing starts.
When dubbing ends, decks A and B automatically stop.

To stop dubbing

Press ■ on deck A or B.

Tips

- When you dub on both sides, start recording from the front side. If you start from the reverse side, recording stops at the end of the reverse side.
- If you set DIRECTION to ⇆ when the tapes you use have different lengths, the tape in each deck reverses independently. If you select RELAY, the tapes in both decks reverse together.
- You don't have to set DOLBY NR, since the tape in deck B is automatically recorded in the same state as the tape in deck A.

Note

You cannot record the surround effect.

Using the CD display

You can check the remaining time of the current track or the whole CD.

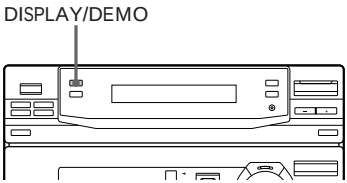

➡ Press DISPLAY/DEMO during playback.

Each time you press this button in Normal Play, the display changes as follows:

→ Elapsed time on the current track
↓
Remaining time on the current track
↓
Remaining time on the current CD (1 DISC mode) or
"PLAY" (ALL DISCS mode)
↓
Clock display (for a few seconds)
↓
Effect (P FILE) name or "EFFECT ON (OFF)"

To check the total playing time and the number of tracks on a CD

Press DISPLAY/DEMO in stop mode.

If you press DISPLAY/DEMO again, the clock display appears for a few seconds then the display returns to the previous indication.

Playing CD tracks repeatedly

— Repeat Play

This function lets you repeat a single CD or all CDs in Normal Play, Shuffle Play, and Programme Play.

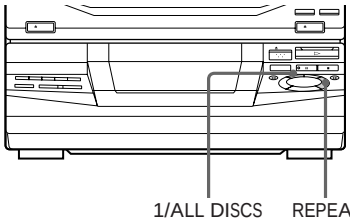

➡ Press REPEAT repeatedly during playback until "REPEAT" appears in the display.

Repeat Play starts. The following table describes the various repeat modes.

To repeat	Press
All the tracks on the current CD	1/ALL DISCS repeatedly until "1 DISC" appears in the display.
All the tracks on all CDs	1/ALL DISCS repeatedly until "ALL DISCS" appears in the display.
Only one track*	REPEAT repeatedly while playing the track you want to repeat until "REPEAT 1" appears in the display.

* You can't repeat a single track during Shuffle Play and Programme Play.

To cancel Repeat Play

Press REPEAT repeatedly until "REPEAT" or "REPEAT 1" disappears from the display.

Playing CD tracks in random order

— Shuffle Play

You can play all the tracks on one CD or all the CDs in random order.

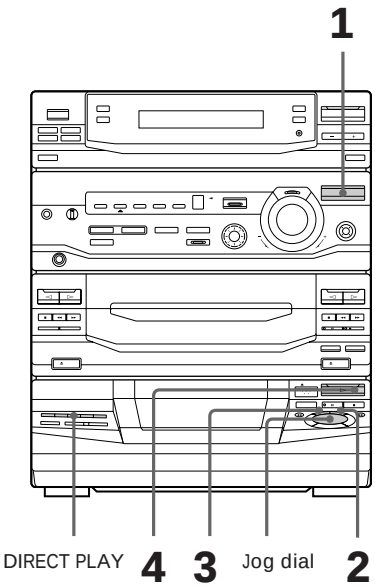

1 Press FUNCTION repeatedly until “CD” appears in the display.

2 Press PLAY MODE repeatedly until “SHUFFLE” appears in the display.

3 Press 1/ ALL DISCS to choose “1 DISC” or “ALL DISCS.”

“All DISCS” shuffles the tracks on all the CDs in the player. “1 DISC” shuffles the tracks on the CD in the playing position.

4 Press ▷.

“ ” appears and all the tracks play in random order.

To cancel Shuffle Play

Press PLAY MODE repeatedly until “SHUFFLE” or “PROGRAM” disappears from the display. The tracks continue playing in their original order.

To select a desired CD

Press one of the DIRECT PLAY buttons during 1 Disc Shuffle Play.

Tips

- You can start Shuffle Play during Normal Play by pressing PLAY MODE repeatedly until “SHUFFLE” appears in the display.
- To skip a track, turn the jog dial clockwise (or press AMS ▶▶I on the remote).

Programming CD tracks

— Programme Play

You can create a programme of up to 32 tracks from all the CDs in the order you want them to be played.

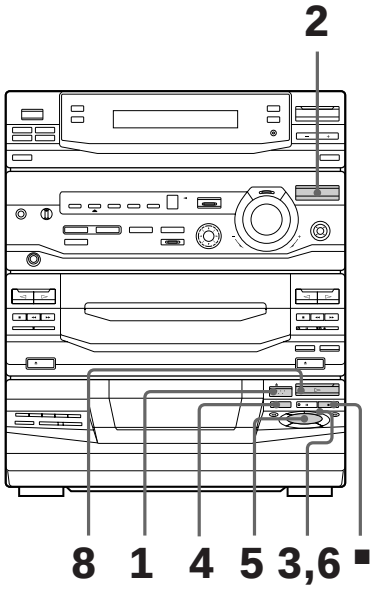

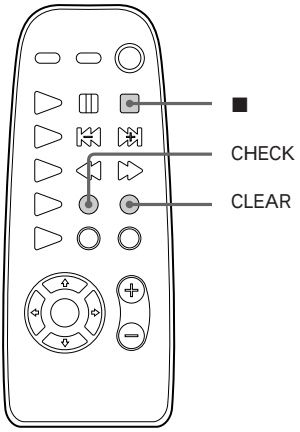

1 Place CDs and close the front cover.

2 Press FUNCTION repeatedly until "CD" appears in the display.

3 Press PLAY MODE repeatedly until "PROGRAM" appears in the display.

4 Press DISC SKIP to select a CD.

5 Turn the jog dial until the desired track appears in the display.

LBT-XB3

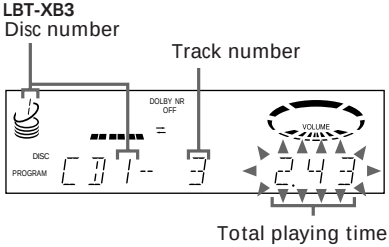

LBT-XB5/XB6

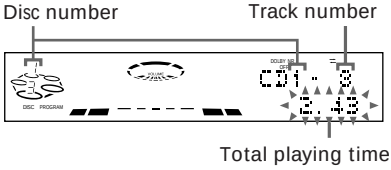

6 Press PLAY MODE once.

The track is programmed. "STEP" and the programmed playing order appear, followed by the total playing time.

LBT-XB3

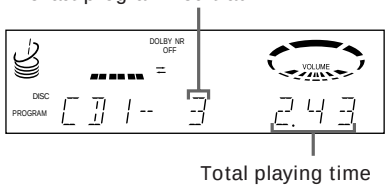

LBT-XB5/XB6

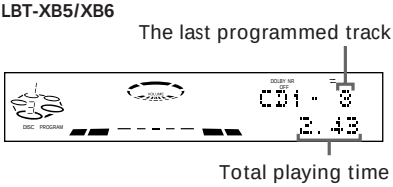

7 To programme additional tracks, repeat steps 4 through 6.
Skip step 4 to select tracks from the same disc.

8 Press ▷.
All the tracks play in the order you selected.

To cancel Programme Play

Press PLAY MODE repeatedly until "PROGRAM" or "SHUFFLE" disappears from the display.

To	Press
Check the programme	CHECK on the remote repeatedly. After the last track, "CHECK END" appears.
Clear the last selected track	CLEAR on the remote in stop mode.
Clear a specific track	CHECK on the remote repeatedly until the number of the track to be cleared lights up, then press CLEAR.
Add a track to the programme	1 Press DISC SKIP to select a CD. 2 Turn the jog dial to select a track. 3 Press PLAY MODE.
Clear the entire programme	■ once in stop mode or twice while playing.

Tips

- The programme you created remains in the CD player's memory even after it has been played. Press ▷ to play the same programme again.
- If "--.--" appears instead of the total playing time while programming, this means:
  – you have programmed a track numbered over 20, or
  – the total playing time has exceeded 100 minutes.

Playing CDs without interruption

–– Non-Stop Play

You can play CDs without pausing between tracks.

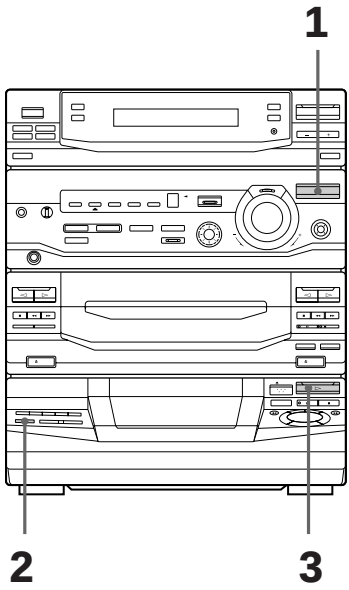

1 Press FUNCTION repeatedly until "CD" appears in the display.

2 Press NON-STOP so the indicator on this button lights up.

3 Press ▷.

To cancel Non-Stop Play

Press NON-STOP so the indicator on this button goes off.

Recording on a tape manually

You can record from CDs, tapes, or the radio as you like. For example, you can record just the songs you want or begin recording from the middle of the tape. The recording level is adjusted automatically.

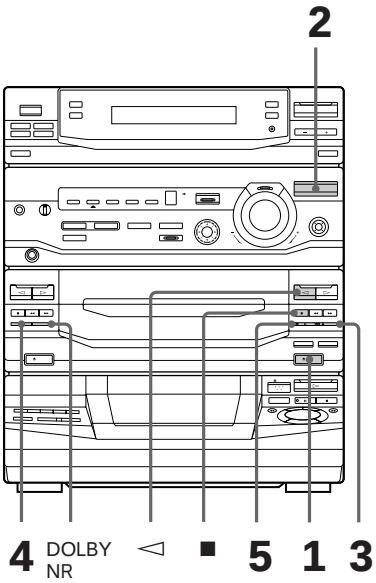

1 Insert a blank tape into deck B.

2 Press FUNCTION repeatedly until the source you want to record (e.g., CD) appears in the display.

3 Press ● REC.
Deck B stands by for recording and the indicator on the ▷ button (for the front side) lights up green.

4 Press DIRECTION repeatedly to select ⇄ to record on one side or ⇆ (or RELAY) to record on both sides.

5 Press ❚❚ on deck B.
Recording starts.

6 Start playing the source to be recorded.

To	Press
Stop recording	■ on deck B
Pause recording	❚❚ on deck B

Tips

- If you want to record on the reverse side, press ◁ so the indicator on the ◁ button (for the reverse side) lights up green.
- When you want to reduce the hiss noise in low-level high-frequency signals, press DOLBY NR before step 5 so “DOLBY NR B” appears in the display.

Recording CDs by specifying the track order

— Programme Edit

You can record tracks from all the CDs in the order you want. When programming, make sure the playing times for each side do not exceed the length of one side of the tape.

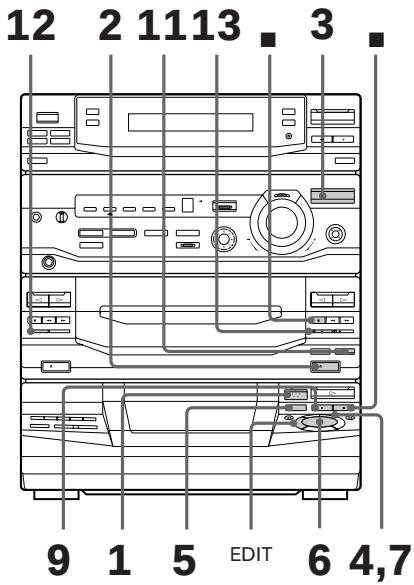

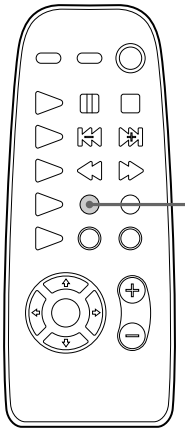

1 Place CDs and close the front cover.

2 Insert a blank tape into deck B.

3 Press FUNCTION repeatedly until "CD" appears in the display.

4 Press PLAY MODE repeatedly until "PROGRAM" appears in the display.

5 Press DISC SKIP to select a CD.

6 Turn the jog dial until the desired track appears in the display.

LBT-XB3

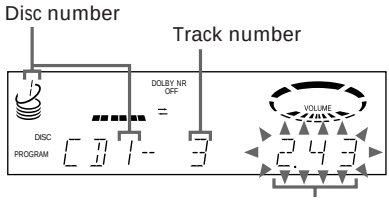

LBT-XB5/XB6

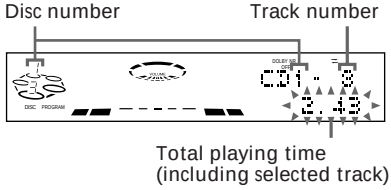

continued

7 Press PLAY MODE once.

The track is programmed. “STEP” and the programmed playing order appear, followed by the total playing time.

LBT-XB3

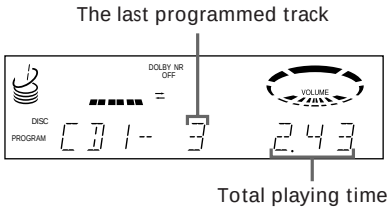

LBT-XB5/XB6

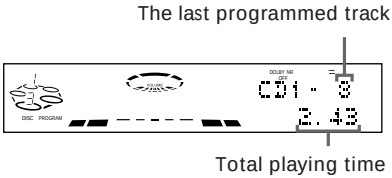

8 Repeat steps 5 through 7 to programme additional tracks to be recorded on side A.

Skip step 5 to select tracks from the same disc.

9 Press ❚❚ to insert a pause at the end of side A.

“P” appears in the display and the total playing time resets to “0.00” in the display.

10 Repeat steps 5 through 7 to programme the tracks to be recorded on side B.

Skip step 5 to select tracks from the same disc.

11 Press CD SYNC.

Deck B stands by for recording, the CD player stands by for playback, and the indicator on the ▷ button (for the front side) lights up green.

12 Press DIRECTION repeatedly to select ⇄ to record on one side or ↻ (or RELAY) to record on both sides.

13 Press ❚❚ on deck B.

Recording starts.

To stop recording

Press ■ on deck B or on the CD player.

To check the order

Press CHECK on the remote repeatedly. After the last track, “CHECK END” appears.

To cancel Programme Edit

Press PLAY MODE repeatedly until “PROGRAM” or “SHUFFLE” disappears from the display.

Selecting the tape length automatically

— *Tape Select Edit*

You can check the most suitable tape length for recording a CD. Note that you cannot use Tape Select Edit for discs containing more than 20 tracks.

➡ After inserting a CD, press EDIT once so “EDIT” flashes.

The required tape length for the CD in the playing position appears, followed by the total playing time for sides A and B.

Note

You cannot use this function when Programme Play mode has been set. After clearing the entire programme (see “To clear the entire programme” on page 21), follow the above procedure.

Looping part of a CD

— Loop

With the loop function, you can repeat part of a CD during playback. This lets you create original recordings.

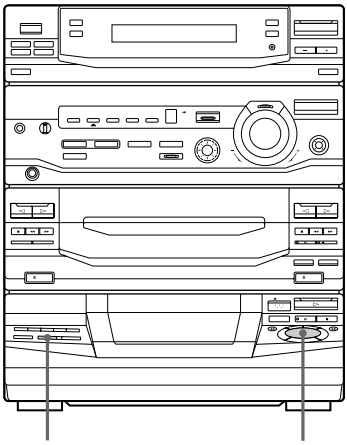

➡ Press and hold LOOP during playback at the point you want to start the Loop function, and release to resume normal playback.

To adjust the loop length

Turn the jog dial while holding LOOP (or press MUSIC MENU ←/→ while holding LOOP on the remote) to select different loop lengths.

Flashing part of a CD

— Flash

With the flash function, you can "flash" the CD sound during playback. This lets you create original recordings.

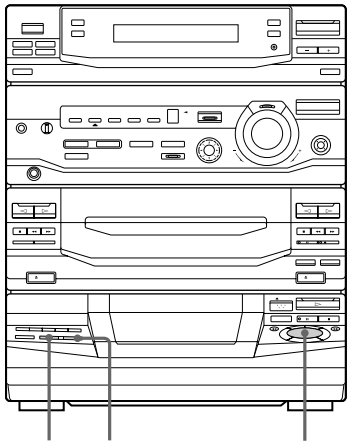

➡ Press and hold FLASH during playback at the point you want to start the Flash function, and release to resume normal playback.

To adjust the flash length

Turn the jog dial while holding FLASH (or press MUSIC MENU ←/→ while holding FLASH on the remote) to select different flash lengths.

To use LOOP and FLASH together

Press and hold both LOOP and FLASH at the same time.

Note

The loop and flash length cannot be adjusted in stop mode. Adjust the loop and flash lengths during operation.

Waving the equalizer

— Wave

With the Wave function, you can fluctuate the graphic equalizer automatically while listening to a source. This effect can be used with any source, but it cannot be recorded.

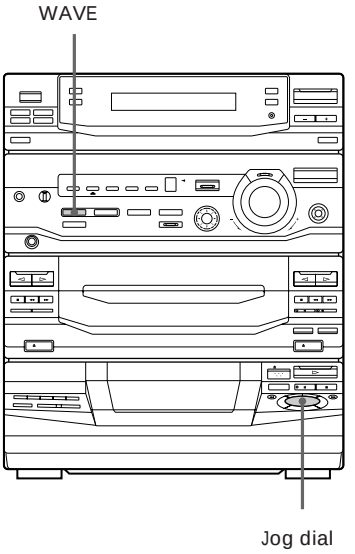

➡ Press and hold WAVE while listening to a source at the point you want to start the Wave function, and release to resume normal playback.

To adjust the wave length

Turn the jog dial while holding WAVE to select different wave lengths.

Adjusting the sound

You can reinforce the bass, create a more powerful sound, and listen with headphones.

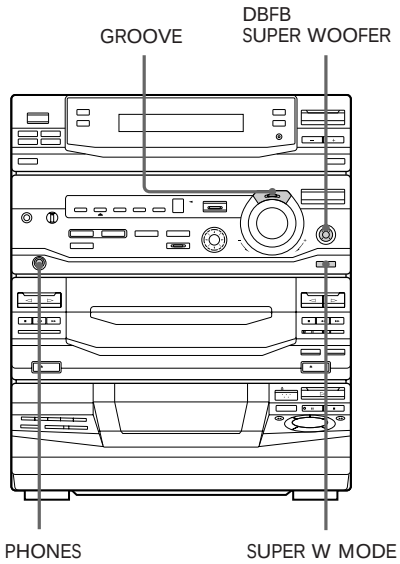

To reinforce the bass (DBFB) (LBT-XB3/XB5 only)

Press DBFB.*

Each time you press this button, the DBFB level display changes as follows:

DBFB ▙\\\ → DBFB ▙\\\\\\ → display off

"DBFB ▙\\\\\\ " reinforces the bass more than "DBFB ▙\\\ ".

* DBFB = Dynamic Bass Feedback

To reinforce the bass from the super woofer (SUPER WOOFER) (LBT-XB6 only)

Press SUPER WOOFER.

Each time you press this button, the super woofer level display changes as follows:

SUPER WOOFER FLAT → LOW → HIGH

To select the super woofer mode (LBT-XB6 only)

Press SUPER W MODE while the super woofer is on.

Each time you press this button, the super woofer mode display changes as follows:

MOVIE ↔ MUSIC

For a powerful sound (GROOVE)

Press GROOVE.

The volume switches to power mode, the equalizer curve changes, the bass level (DBFB or SUPER WOOFER) changes to "HIGH," and the indicator on the GROOVE button lights up. Press GROOVE again to return to the previous volume.

Notes

- The music sound will be distorted when you use the DBFB system with the graphic equalizer if the bass is too strong. Adjust the bass slowly while listening to the music so you can monitor the effect of the adjustment.
- Cancelling GROOVE cancels the equalizer curve and bass level. Adjust the equalisation to obtain the effect you desire.

To listen through the headphones

Connect the headphones to the PHONES jack.

No sound will come from the speakers.

Selecting the audio emphasis

The audio emphasis menu lets you select the sound characteristics according to the music you are listening to.

The personal file function (see “Making a personal audio emphasis file (Personal File)”) lets you store your own effects.

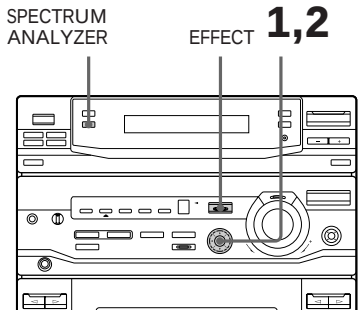

1 Press GEQ ↑/↓ (or MUSIC MENU ↑/↓ on the remote) repeatedly to select MENU 1 or MENU 2.

See the chart “Music menu options” below. The last audio emphasis chosen from that menu appears in the display.

2 Press GEQ ←/→ (or MUSIC MENU ←/→ on the remote) repeatedly to select the audio emphasis you desire.

The audio emphasis name appears in the display.

To cancel the audio emphasis

Press EFFECT (or MUSIC MENU ON / OFF on the remote) repeatedly so the indicator on the EFFECT button goes off.

Music menu options

“SUR ” appears if you select an audio emphasis with a surround effect.

Press	To select	
GEQ ↑/↓	MENU 1	MENU 2
GEQ ←/→	ROCK	MOVIE
	POP	GAME
	JAZZ	NIGHT
	DANCE	PARTY
	SALSA	RELAX

To change the equalizer display

Each time you press SPECTRUM ANALYZER, the equalizer display changes to show one of the four displays below.

LBT-XB3

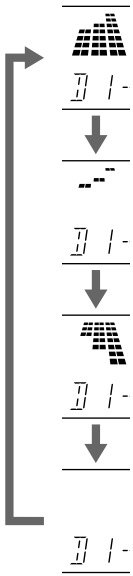

LBT-XB5/XB6

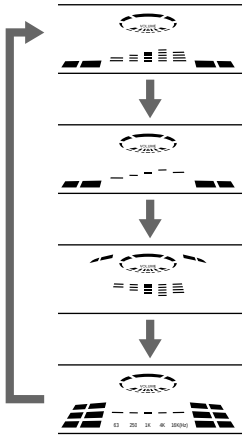

Adjusting the audio emphasis

You can adjust the audio emphasis using the graphic equalizer and surround effect.

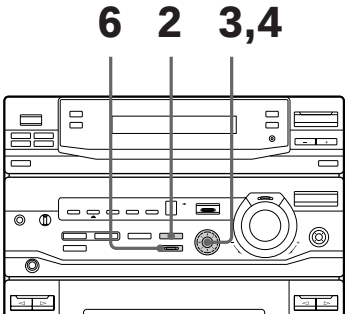

Adjusting the graphic equalizer

You can adjust the sound by raising or lowering the levels of specific frequency ranges.

Before operation, first select the basic audio emphasis you want for your sound.

1 Select the basic audio emphasis you want for your sound.
(see “Selecting the audio emphasis.”)

2 Press GEQ CONTROL.
The frequency range appears and the level value flashes in the display.

3 Press GEQ ←/→ repeatedly to select a frequency band.

LBT-XB3

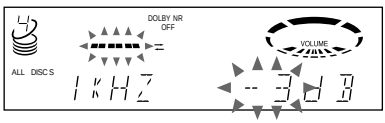

LBT-XB5/XB6

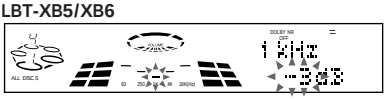

4 Press GEQ ↑/↓ to adjust the level.

LBT-XB3

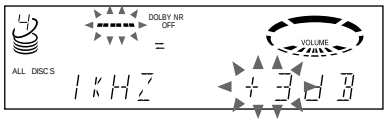

LBT-XB5/XB6

5 Repeat steps 3 and 4 to adjust the other frequency bands.

6 Press ENTER when finished.

Note

If you choose another audio emphasis (other than “EFFECT OFF”), the adjusted sound effect is lost. To retain the adjusted sound effect for future use, store it in a personal file (see “Making a personal audio emphasis file”).

Activating the surround effect

You can enjoy the surround effect.

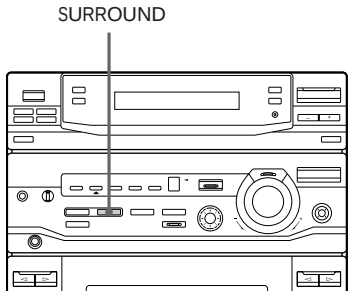

➡ Press SURROUND so “SUR (((■))) ” appears in the display.

Note

If you choose other sound effects, the surround effect will be cancelled. To retain the effect, store it in a personal file (see “Making a personal audio emphasis file”).

Making a personal audio emphasis file

— Personal File

You can create personal files of audio patterns (surround effect and graphic equalizer) and store them in the unit's memory. Later call up an audio pattern to play a favourite tape, CD, or radio programme. You can create up to five audio files. Before operation, first select the basic audio emphasis you want for your sound.

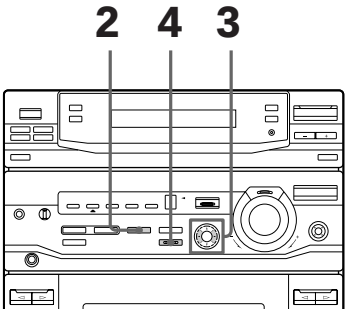

1 Create the sound effect you want by using the graphic equalizer and surround effect (see “Adjusting the audio emphasis”).

2 Press P FILE MEMORY.

A personal file number appears in the display.

LBT-XB3

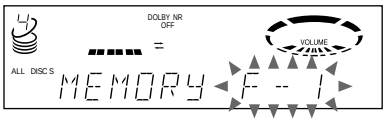

LBT-XB5/XB6

3 Press GEQ ←/→ to select the file number (P FILE) where you want to store the sound effect.

4 Press ENTER.

The adjusted sound effects are stored under the selected file number. Any settings previously stored at this memory location are erased and replaced by the new settings.

To call up the personal file

1 Press GEQ ↑/↓ (or MUSIC MENU ↑/↓ on the remote) repeatedly to display the last selected personal file.

2 Press GEQ ←/→ (or MUSIC MENU ←/→ on the remote) repeatedly to select the desired personal file.

Singing along: Karaoke

You can sing along with any stereo CD or tape by turning down the singer's voice. You need to connect an optional microphone.

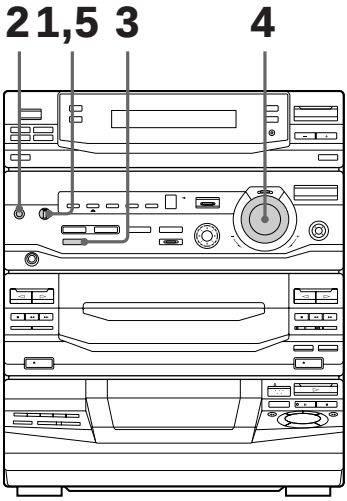

1 Turn MIC LEVEL to MIN to turn down the microphone level.

2 Connect an optional microphone to the MIC jack.

3 Press KARAOKE PON / MPX repeatedly to obtain the desired karaoke effect.

Each time you press this button, the display changes as follows:

KARAOKE PON → MPX R → MPX L → EFFECT OFF (ON) →

"🎤" appears in the display when the karaoke mode is activated.

To	Select
Reduce the singer's voice on a CD or tape	KARAOKE PON
Reduce the left channel on a multiplex CD or tape.	MPX R
Reduce the right channel on a multiplex CD or tape.	MPX L

4 Start playing the music and adjust the volume.

5 Turn MIC LEVEL to adjust the microphone volume.

When you are done

Turn MIC LEVEL to MIN and disconnect the microphone from MIC, then press KARAOKE PON / MPX repeatedly until "🎤" disappears from the display.

continued

Mixing and recording sounds

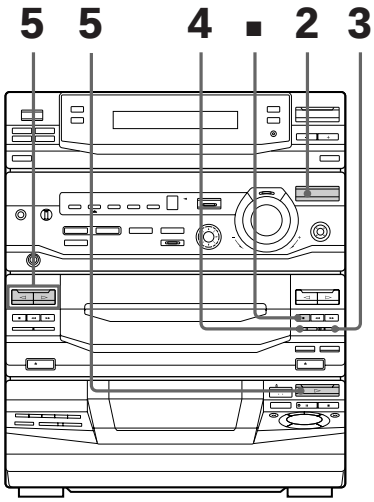

1 Prepare the microphone and the karaoke effect. Then, insert a blank tape in deck B.

2 Press FUNCTION repeatedly to select the source you desire and set it to pause mode.

3 Press ● REC.

4 Press ❚❚.

5 Press ▷ to start playing the CD (or tape in deck A).
Playback starts.
Start singing along with the music.

To stop recording

Press ■ on deck B.

Tips

- If acoustic feedback (howling) occurs, move the microphone away from the speakers or change the direction of the microphone.
- If you want to record your voice through the microphone only, you can do so by selecting the CD source and not playing a CD.

Notes

- If you press EFFECT or select a sound effect. The karaoke mode is cancelled.
- The instrumental sound may be reduced as well as the singer's voice when the source sound was recorded monaurally.
- The singer's voice may not be reduced when:
  - — only a few instruments are playing
  - — a duet is being sung
  - — the source has strong echoes or chorus
  - — the singer's voice deviates from the centre.
  - — the voice on the source is singing high soprano or tenor notes.

Falling asleep to music

— Sleep Timer

You can set the system to turn off at a preset time, so you can fall asleep listening to music. You can preset the remaining time in 10 minute increments.

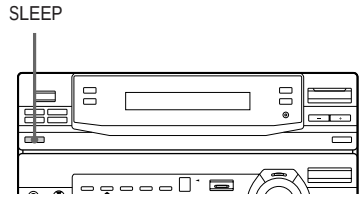

➡ Press SLEEP.

Each time you press this button, the minutes display (the remaining time) changes as follows:

AUTO → 90min → 80min → 70min
↑ ↓
OFF ← 10min ..... 50min ← 60min

When you choose AUTO

The power turns off when the current CD or tape finishes playback (up to 100 minutes). The power turns off if you manually stop playing a CD or tape.

To check the remaining time

Press SLEEP once.

To change the remaining time

Press SLEEP repeatedly to select the time you want.

To cancel the Sleep Timer function

Press SLEEP repeatedly until “SLEEP OFF” appears in the display.

Waking up to music

— Wake-up Timer

You can wake up to music at a preset time every day. Make sure you have set the clock (see “Step 2: Setting the time”).

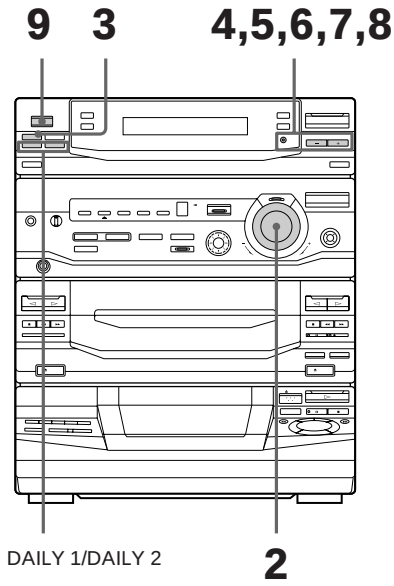

1 Prepare the music source you want to play.

- CD: Insert a CD. To start from a specific track, create a programme (see “Programming CD tracks”).
- Tape: Insert an tape with the side you want to play facing forward.
- Radio: Tune in the preset station you want (see “Step 3: Presetting radio stations”).

2 Turn VOLUME to adjust the volume.

3 Press ⏲/CLOCK SET.

“SET” appears and “DAILY 1” flashes in the display.

continued

4 Press TUNING + / – to select DAILY 1 or DAILY 2, then press ENTER / NEXT.

"ON" appears and the hour indication flashes in the display.

LBT-XB3

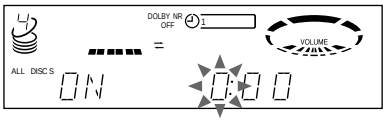

LBT-XB5/XB6

5 Set the time to start playing.

Press TUNING + / – to set the hour, then press ENTER / NEXT.

The minutes indication flashes.

LBT-XB3

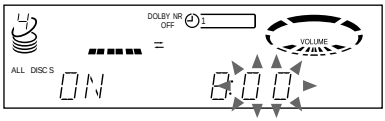

LBT-XB5/XB6

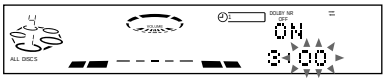

Press TUNING + / – to set the minutes, then press ENTER / NEXT.

The hour indication flashes again.

6 Set the time to stop playing following the above procedure.

7 Press TUNING + / – until the music source you want appears.

The indication changes as follows:

TUNER → CD PLAY → TAPE PLAY

8 Press ENTER / NEXT.

The start time, the stop time, and the music source appear in turn before the original display returns.

9 Turn off the power.

To check the setting

1. Press the timer button you have set, DAILY 1 or DAILY 2.
2. "TIMER OFF" appears in the display.
3. Press DAILY 1 or DAILY 2 again.

To cancel the timer operation

1. Press the timer button you have set, DAILY 1 or DAILY 2.
2. "TIMER OFF" appears in the display.

Notes

- The system turns on 15 seconds before the preset time.
- You cannot activate DAILY 1 and DAILY 2 at the same time.
- You cannot set the timer if the timer on and off times are the same.
- When you set the Sleep Timer, the Wake-up Timer will not turn on the system until the Sleep Timer turns it off.
- You cannot activate the Wake-up Timer and Timer-recording at the same time.

Timer-recording radio programmes

To timer-record, you must preset the radio station (see “Step 3: Presetting radio stations”) and set the clock (see “Step 2: Setting the time”) beforehand.

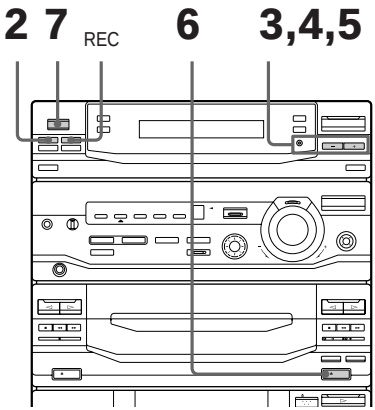

1 Tune in the preset radio station (see “Listening to the radio”).

2 Press ⏲/CLOCK SET.

“SET” appears and “DAILY 1” flashes in the display.

3 Press TUNING +/– to select REC, then press ENTER/NEXT.

“ON” appears and the hour indication flashes in the display.

LBT-XB3

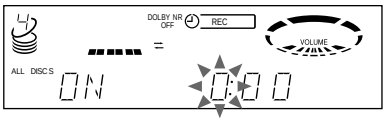

LBT-XB5/XB6

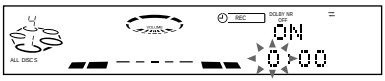

4 Set the time to start recording.

Press TUNING +/– to set the hour, then press ENTER/NEXT.

The minutes indication flashes.

LBT-XB3

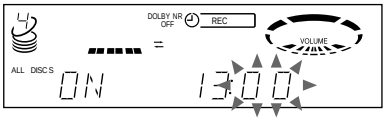

LBT-XB5/XB6

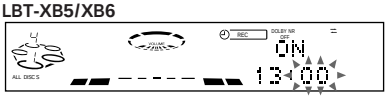

Press TUNING +/– to set the minutes, then press ENTER/NEXT.

The hour indication flashes again.

5 Set the time to stop recording following the above procedure.

The start time, the stop time, the recording source, and the preset station appear in turn before the original display returns.

6 Insert a blank tape in deck B.

7 Turn off the power.

When recording starts, the volume level is set to the minimum.

continued

Timer-recording radio programmes (continued)

To check the setting

1 Press REC.

2 "TIMER OFF" appears in the display.

3 Press REC again.

To change the setting, start over from step 1.

To cancel the timer operation

1 Press REC.

2 "TIMER OFF" appears in the display.

Notes

- The system turns on 15 seconds before the preset time.
- If the power is on at the preset time, the recording will not be made.
- You cannot set the timer if the timer on and off times are the same.
- When you set the Sleep Timer, the Timer-recording will not start until the Sleep Timer turns off the system.
- You cannot activate the Wake-up Timer and Timer-recording at the same time.
- Recording starts from the front side.

Precautions

On operating voltage

Before operating the system, check that the operating voltage of your system is identical with the voltage of your local power supply.

On safety

- The unit is not disconnected from the AC power source (mains) as long as it is connected to the wall outlet, even if the unit itself has been turned off.
- Unplug the system from the wall outlet (mains) if it is not to be used for an extended period of time. To disconnect the cord (mains lead), pull it out by the plug. Never pull the cord itself.
- Should any solid object or liquid fall into the component, unplug the stereo system and have the component checked by qualified personnel before operating it any further.
- The AC power cord must be changed only at the qualified service shop.

On placement

- Place the stereo system in a location with adequate ventilation to prevent heat build-up in the stereo system.
- Do not place the unit in an inclined position.
- Do not place the unit in locations where it is;
  - — Extremely hot or cold
  - — Dusty or dirty
  - — Very humid
  - — Vibrating
  - — Subject to direct sunlight

On operation

- If the stereo system is brought directly from a cold to a warm location, or is placed in a very damp room, moisture may condense on the lens inside the CD player. Should this occur, the system will not operate properly. Remove the CD and leave the system turned on for about an hour until the moisture evaporates.
- When you move the system, take out any discs.

If you have any questions or problems concerning your stereo system, please consult your nearest Sony dealer.

Notes on CDs

- Before playing, clean the CD with a cleaning cloth. Wipe the CD from the centre out.
- Do not use solvents such as benzene, thinner, commercially available cleaners or antistatic spray intended for vinyl LPs.
- Do not expose the CD to direct sunlight or heat sources such as hot air ducts, nor leave it in a car parked in direct sunlight.

Cleaning the cabinet

Use a soft cloth slightly moistened with mild detergent solution.

To save a tape permanently

To prevent a tape from being accidentally recorded over, break off the cassette tab from side A or B as illustrated. If you later want to reuse the tape for recording, cover the broken tab with adhesive tape.

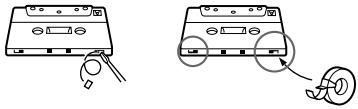

When you are using a TYPE II (CrO_2) or TYPE IV (metal) cassette, be careful not to cover the detector slots which allow the tape player to automatically detect the type of tape.

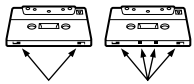

Before placing a cassette in the tape deck

Take up any slack in the tape. Otherwise the tape may get entangled in the parts of the tape deck and become damaged.

When using a tape longer than 90 minutes

The tape is very elastic. Do not change the tape operations such as play, stop, and fast-winding etc. frequently. The tape may get entangled in the tape deck.

Cleaning the tape heads

Clean the tape heads after every 10 hours of use. When the tape heads become dirty

- — the sound is distorted
- — there is a decrease in sound level
- — the sound drops out
- — the tape does not erase completely
- — the tape does not record

Make sure to clean the tape heads before you start an important recording or after playing an old tape. Use separately sold dry-type or wet-type cleaning cassette. For details, refer to the instructions of the cleaning cassette.

Demagnetising the tape heads

Demagnetise the tape heads and the metal parts that have contact with the tape every 20 to 30 hours of use with a separately sold demagnetising cassette. For details, refer to the instructions of the demagnetising cassette.

Troubleshooting

If you run into any problem using this stereo system, use the following check list.

First, check that the mains lead is connected firmly and the speakers are connected correctly and firmly.

Should any problem persist, consult your nearest Sony dealer.

General

The display starts flashing as soon as you plug in the mains lead even though you haven't turned on the power (demonstration mode).

- Press DISPLAY / DEMO while the system power is off.

  The demonstration appears automatically the first time you plug in the mains lead, or if there is a power outage lasting longer than half a day.

  In this case, reset the following:

  — Clock setting (see "Step 2: Setting the time")

  — Press DISPLAY / DEMO while the system power is off.

There is no sound.

- Turn VOLUME clockwise.
- The headphones are connected.
- Insert only the stripped portion of the speaker cord into the SPEAKER jack. Inserting the vinyl portion of the speaker cord will interfere with the speaker connection.

There is no microphone sound

- Turn VOLUME or MIC LEVEL to adjust the microphone volume.
- Make sure the microphone is connected to the MIC jack correctly.

There is severe hum or noise.

- A TV or VCR is placed too close to the stereo system. Move the stereo system away from the TV or VCR.

"0:00" flashes in the display.

- A power interruption occurred. Reset the clock and timer settings.

The timer does not function.

- Set the clock correctly.

DAILY 1, DAILY 2, and REC do not appear when you press ◴/CLOCK SET.

- Set the timer correctly.
- Set the clock.

The remote does not function.

- There is an obstacle between the remote and the unit.
- The remote is not pointing in the direction of the system's sensor.
- The batteries have run down. Replace the batteries.

There is acoustic feedback.

- Decrease the volume level.
- Move the microphone away form the speakers or change the direction of the microphone.

The colour irregularity on a TV screen persists.

- Turn off the TV set once, then turn it on after 15 to 30 minutes. If the colour irregularity still persists, place the speakers farther away from the TV set.

Speakers

Sound comes from only one channel or the left and right volumes are unbalanced.

- Check the speaker connections and placement.

There is no sound from the surround speakers (LBT-XB6 only).

- Press SURROUND to turn on the surround effect.

CD Player

The CD tray does not rotate.

- A CD is not placed properly.

A CD will not play.

- The CD is not lying flat in the disc tray.
- The CD is dirty.
- The CD is inserted label side down.
- Moisture condensation has built up. Remove the CD and leave the system turned on for about an hour until the moisture evaporates.

Play does not start from the first track.

- The player is in Programme or Shuffle Play mode. Press PLAY MODE repeatedly until “PROGRAM” or “SHUFFLE” disappear from the display.

Tape Deck

The tape does not record.

- No tape is in the cassette holder.
- The tab has been removed from the cassette (see page 37).
- The tape has reeled to the end.

The tape does not record nor play, or there is a decrease in sound level.

- The heads are dirty. Clean them (see page 37).
- The record / playback heads are magnetised. Demagnetise them (see page 37).

The tape does not erase completely.

- The record / playback heads are magnetised. Demagnetise them (see page 37).

There is excessive wow or flutter, or the sound drops out.

- The capstans or pinch rollers are dirty. Clean them (see page 37).

Noise increases or the high frequencies are missing.

- The record / playback heads are magnetised. Demagnetise them (see page 37).

Tuner

Severe hum or noise (“TUNED” or “STEREO” flashes in the display.

- Adjust the aerial.
- The signal strength is too weak. Connect an external aerial.

A stereo FM programme cannot be received in stereo.

- Press STEREO / MONO so “STEREO” appears in the display.

If other problems not described above occur, reset the system as follows:

(LBT-XB3 only)

1. Unplug the mains lead.
2. Plug the mains lead back in.
3. Press GROOVE, ENTER / NEXT, and DISC 1 at the same time.

(LBT-XB5/XB6 only)

1. Unplug the mains lead.
2. Plug the mains lead back in.
3. Press SPECTRUM ANALYZER, ENTER, and DISC 1 at the same time.

Specifications

Amplifier section

DIN power output
(LBT-XB3) 55 + 55 watts (6 ohms at 1 kHz, DIN)
(LBT-XB5) 100 + 100 watts (6 ohms at 1 kHz, DIN)
(LBT-XB6) 100 + 100 watts (6 ohms at 1 kHz, DIN)

Continuous RMS power output
(LBT-XB3) 65 + 65 watts (6 ohms at 1 kHz, 10% THD)
(LBT-XB5) 120 + 120 watts (6 ohms at 1 kHz, 10% THD)
(LBT-XB6) 120 + 120 watts (6 ohms at 1 kHz, 10% THD)

Music power output:
(LBT-XB3) 100 + 100 watts
(LBT-XB5) 210 + 210 watts
(LBT-XB6) 210 + 210 watts

Inputs
PHONO IN (phono jacks): sensitivity 3 mV, impedance 47 kilohms
VIDEO (AUDIO) IN (phono jacks): sensitivity 250 mV, impedance 47 kilohms
MIX MIC (phone jack): sensitivity 1 mV, impedance 10 kilohms

Outputs
PHONES (stereo phone jack): accepts headphones of 8 ohms or more
SPEAKER:
(LBT-XB3) accepts impedance of 6 to 16 ohms
(LBT-XB5 / XB6) accepts impedance of 8 to 16 ohms
SURROUND SPEAKER (LBT-XB5 / XB6 only): accepts impedance of 16 ohms

CD player section

System	Compact disc and digital audio system
Laser	Semiconductor laser (λ = 780 nm) Emission duration: continuous
Laser output	Max. 44.6 μF* * This output is the value measured at a distance of 200 mm from the objective lens surface on the Optical Pick-up Block with 7 mm aperture.
Wavelength	780 – 790 nm
Frequency response	2 Hz – 20 kHz (±0.5 dB)
Signal-to-noise ratio	More than 90 dB
Dynamic range	More than 90 dB

Tape player section

Recording system	4-track 2-channel stereo
Frequency response (DOLBY NR OFF)	60 – 13,000 Hz (±3 dB), using a Sony TYPE I cassette 60 – 14,000 Hz (±3 dB), using a Sony TYPE II cassette
Wow and flutter	±0.15% W. Peak (IEC) 0.1% W. RMS (NAB) ±0.2% W. Peak (DIN)

Tuner section

FM stereo, FM / AM superheterodyne tuner

FM tuner section

Tuning range	
3 band model:	87.5 – 108.0 MHz (50 kHz step)
4 band model	
FM:	87.5 – 108.0 MHz (50 kHz step) 65.0 – 74.0 MHz (10 kHz step) OIRT
UKV:	65.0 – 74.0 MHz (10 kHz step) POLAR STEREO
Aerial	FM wire aerial
Aerial terminals	75 ohm unbalanced
Intermediate frequency	10.7 MHz

AM tuner section

Tuning range	
MW:	531 – 1,602 kHz (with the tuning interval set at 9 kHz)
LW:	153 – 279 kHz (with the tuning interval set at 3 kHz)
Aerial	AM loop aerial, External aerial terminal
Intermediate frequency	450 kHz

Speakers

SS-XB6AV for LBT-XB6

Speaker system	3-way, 3-unit, SAW, Magnetically shielded type
Speaker units	
Super Woofer:	17 cm dia., cone type
Woofer:	17 cm dia., cone type
Tweeter:	6 cm dia., cone type
Rated impedance	8 ohms
Dimensions (w / h / d)	Approx. 260 × 525 × 415 mm (10 1/4 × 20 3/4 × 16 3/8 in)
Mass	Approx. 13.0 kg (28 lb 11 oz.) net per speaker

For LBT-XB3/XB5

See the speakers' manual for details.

General

Power requirements	220 – 230 V AC, 50 / 60 Hz
Power consumption	
(LBT-XB3)	130 watts
(LBT-XB5)	230 watts
(LBT-XB6)	230 watts
Dimensions (w / h / d)	Approx. 355 × 425 × 435 mm (14 × 16 3/4 × 17 1/4 in) incl. projecting parts and controls
Mass	
(LBT-XB3)	Approx. 10.6 kg (23 lb 6 oz)
(LBT-XB5)	Approx. 12.0 kg (26 lb 7 oz)
(LBT-XB6)	Approx. 12.5 kg (27 lb 9 oz)
Supplied accessories	AM loop aerial (1) Remote RM-SD70 (1) Sony SUM-3 (NS) batteries (2) FM wire aerial (1) Speaker cords (2) (LBT-XB6 only)

Design and specifications are subject to change without notice.

Index

A

Adjusting
- the audio emphasis 29
- the sound 27
- the volume 11, 13, 16

Aerials 5, 9
Audio emphasis 28, 29
Automatic Source Selection 11, 13, 16

B

Batteries 5

C

CD player 10, 18
CD Synchro Recording 12
Clock setting 6
Connecting. *See* Hooking up

D, E

Display 5, 18, 28
Dubbing 17

F, G

Flash 25

H, I, J

Hooking up
- optional components 8
- optional speakers 8
- the aerials 5, 9
- the power 5
- the system 4

K

Karaoke 31
- to reduce the vocals (KARAOKE PON) 31
- to sing along with a multiplex CD or tape (MPX R / MPX L) 31

L

Loop 25

M

Microphone
- mixing 32

Mixing sound 32

N

Normal Play 10
Non Stop Play 21

O

One Touch Play 11, 13, 16

P , Q

Personal File 30
Playing
- a CD 10
- a preset radio station 13
- a tape 15
- tracks in random order (Shuffle Play) 19
- tracks in the desired order (Programme Play) 20
- tracks repeatedly (Repeat Play) 18
- without interruption 21

Presetting radio stations 7
Preset tuning 13
Programme Edit 23
Programme Play 20
Protecting recordings 37

R

Radio stations
- presetting 7
- tuning in 13

Recording
- a CD 12
- a radio programme 14
- a tape manually 22
- another tape 17
- CDs by specifying the track order 23
- selecting tape length automatically 24
- timer recording 35

Repeat Play 18
Resetting the system 41

S

Saving recordings 37
Setting the time 6
Shuffle Play 19
Sleep Timer 33
Sound adjustment 27
Speakers 4, 8
Surround effect 29

T, U, V

Tape Select Edit 24
Timer
- falling asleep to music 33
- timer recording 35
- waking up to music 33

Troubleshooting 38
Tuner 7, 13, 14
Turntable 8

W, X, Y, Z

Wake-up timer 33
Wave 26

Sony Corporation Printed in Indonesia